LOAN DOCUMENT

PHOTOGRAPH THIS SHEET

DTIC ACCESSION NUMBER

LEVEL

INVENTORY

DOCUMENT IDENTIFICATION

DISTRIBUTION STATEMENT

ACCESSION FOR
NTIS GRA&I
DTIC TRAC
UNANNOUNCED
JUSTIFICATION

BY

DISTRIBUTION/

AVAILABILITY CODES

DISTRIBUTION	AVAILABILITY AND/OR SPECIAL	
A-1		

DISTRIBUTION STAMP

DATE ACCESSIONED

DATE RETURNED

19981223 080

DATE RECEIVED IN DTIC

REGISTERED OR CERTIFIED NUMBER

PHOTOGRAPH THIS SHEET AND RETURN TO DTIC-FDAC

HANDLE WITH CARE

Reproduced From
Best Available Copy

DTIC FORM 70A JUN 90

DOCUMENT PROCESSING SHEET

PREVIOUS EDITIONS MAY BE USED UNTIL STOCK IS EXHAUSTED.

LOAN DOCUMENT

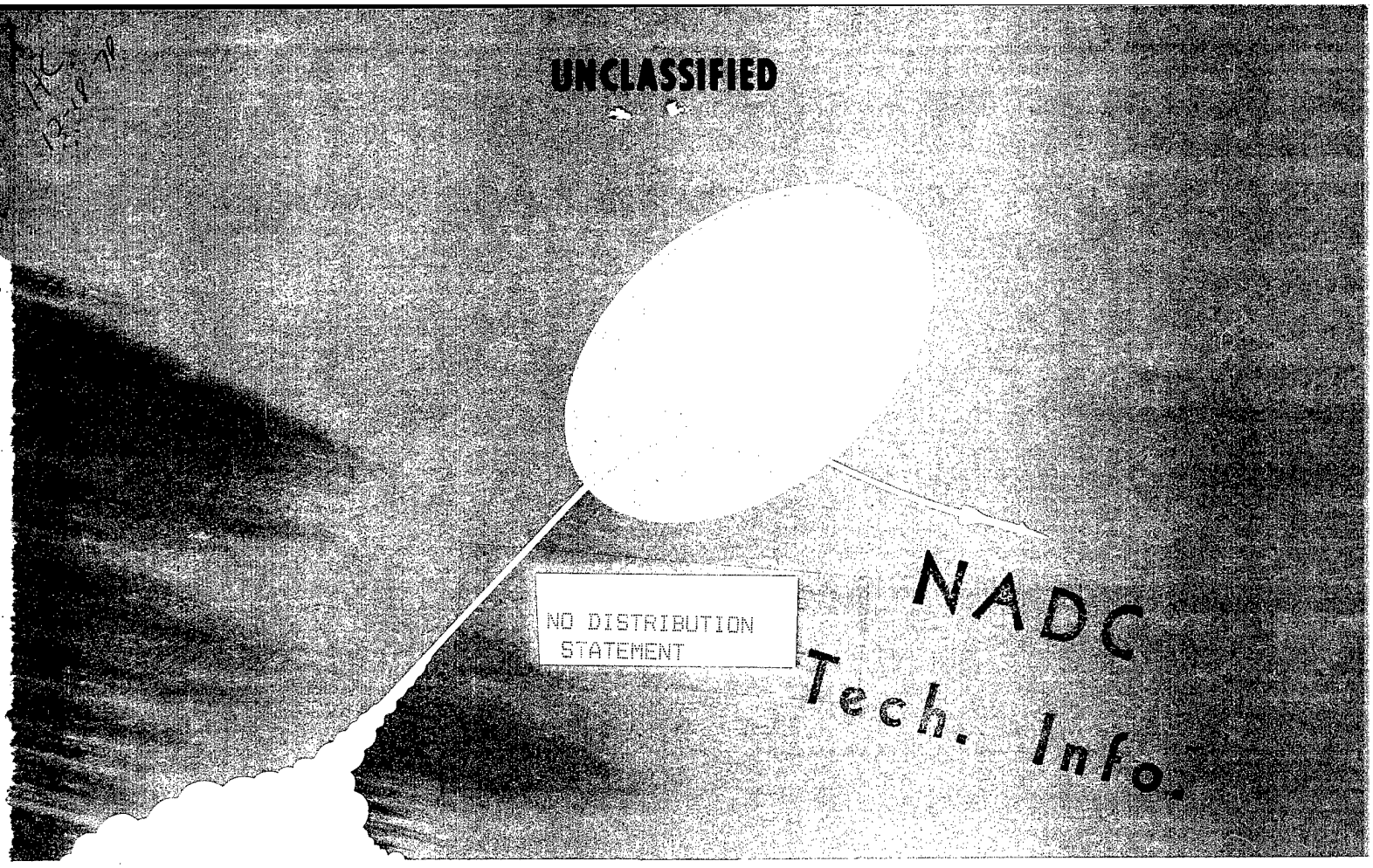

APPENDIX 27
SS NEW EMITTER START UNIT (NESU) & FLOW CHARTS
FINAL SOFTWARE REPORT
DATA ITEM NO. A005

Reproduced From
Best Available Copy

INTEGRATED ELECTRONIC WARFARE SYSTEM
ADVANCED DEVELOPMENT MODEL (ADM)

18007877-27

PREPARED FOR:

NAVAL AIR DEVELOPMENT CENTER
WARMINSTER, PENNSYLVANIA

CONTRACT N62269-75-C-0070

RAYTHEON
ELECTROMAGNETIC
SYSTEMS DIVISION

1 OCTOBER 1977

APPENDIX 27

SIGNAL SORTER NEW EMITTER SOFTWARE DESIGN SPECIFICATION

FINAL SOFTWARE REPORT

DATA ITEM A005

INTEGRATED ELECTRONIC WARFARE SYSTEM (IEWS)
ADVANCED DEVELOPMENT MODEL (ADM)

Contract No. N62269-75-C-0070

Prepared for:

Naval Air Development Center
Warminister, Pennsylvania

Prepared by:

RAYTHEON COMPANY
Electromagnetic Systems Division
6380 Hollister Avenue
Goleta, California 93017

1 OCTOBER 1977

RAYTHEON	RAYTHEON COMPANY LEXINGTON, MASS. 02173	CODE IDENT NO. 49956	SPEC NO. CG-983645 - 4 SHEET 1 OF REV

TYPE OF SPEC

COMPUTER PROGRAM DESIGN SPECIFICATION

TITLE OF SPEC

IEWS Signal Sorter NESU Software

FUNCTION	APPROVED	DATE	FUNCTION	APPROVED	DATE
WRITER	N. Fujiyoshi	11/12/75			

REVISIONS

CHK	DESCRIPTION	REV	CHK	DESCRIPTION	REV

REVISION																						
SHEET NO																						
REV STATUS OF SHEETS	REVISION																					
	SHEET NO.																					

[illegible] VELLUM PRINTED IN U.S.A.

COMPUTER PROGRAM DESIGN SPECIFICATION

IEWS Signal Sorter NESU Software

1.0 SCOPE

This document describes the operation of the New Emitter Start Unit (NESU) software/which performs the new emitter detection function in the IEWS Signal Sorter.

2.0 APPLICABLE DOCUMENTS

WS-8506 Requirements for Digital Computer Program Documentation, Rev. 1, dated 1 November 1971

RP-16 Micro-Processor Manual

5412-IEWS:75:04 New Emitter Search Unit Design Specification, Rev. B

3.0 REQUIREMENTS

3.1 FUNCTION ALLOCATION/DESCRIPTION

The NESU software consists of the following modules:

Initializer

NESU Main Program

Core Manager

PDW Buffer Interrupt Handler

Bus Hung Interrupt Handler

The Initializer initializes the NESU buffers, flags and tables, the PDW Buffer, and the NESU CAM. The NESU Main Program performs the processing of PDW's detection of new emitters, communication with the Supervisor, and control of the NESU CAM. The Core Manager maintains dynamic core storage used for storing PDW's. The PDW Buffer Interrupt Handler processes all PDW Buffer full interrupts, and the Bus Hang Interrupt Handler processes all Bus Hang interrupts.

3.2 FUNCTIONAL DESCRIPTION

3.2.1 INITIALIZATION MODULE

The Initialization Module initializes all of the software in the NESU. This module is executed when the Supervisor performs an Initialize and New Start of the NESU Micro-Processor or the NESU received an Initialize message from the Supervisor. The Initialization Module clears the NESU CAM, the Emitter File, the PDW Buffer, the AOA File, initializes the PDW Buffer control, sets the Idle flag, enables all interrupts, and starts the NESU Main Program.

3.2.2 NESU MAIN PROGRAM

The NESU Main Program processes all incoming Supervisor messages, inputs and processes PDW's in the PDW Buffer, searches the CAM and links PDW's to the best matching track file, maintains the AOA File, generates new track files and maintains the NESU CAM.

The Supervisor messages and the actions taken for each message are:

Stop NESU Function	Set Idle Flag
Initialize and Restart	Start Initialization Module
Modify Track Start Threshold	Set Track Start Threshold to new value
AOA Threshold Modify	Set AOA Threshold to new value
AOA Readout Request	Send AOA File Dump messages to Supervisor
CAM File Dump	Send CAM File Dump messages to Supervisor
Continue NESU	Clear Idle flag

The Supervisor message input buffer consists of two words where the first word is a flag and the second word is used to store a value. The contents of the flag word have the following meanings:

0	Buffer Empty
1	Stop NESU Message
2	Initialize and Restart Message
3	Modify Track Start Threshold - second word contains threshold
4	AOA Threshold Modify - second word contains threshold
5	AOA Readout Request
6	CAM File Dump
7	Continue NESU

The flag word is set by the Supervisor to the proper value and is cleared by the NESU when the message is processed.

The NESU contains three output message buffers. Two are used for sending high priority messages to the Supervisor and one is used for sending low priority messages to the Supervisor. The two high priority message buffers contain two words apiece where the first word is a flag word. The NESU sets the flag word to a 1 for a New Emitter Message and a 2 for a Supervisor PDW Message. The format for a New Emitter Message is:

Word 0	1
Word 1	Pointer to PDW List
Word 2 - 9	Standard Track File Format

Word 1 contains the address of the first PDW block in the list of 10 PDW's used to generate the New Emitter Parameters. Each block consists of 5 words where the first word contains the address of the next block and the second through fifth words contains the PDW data in standard PDW format. The first word in the last block of the list contains a zero.

The Supervisor PDW Message has the following format:

Word 0	2
Word 1	File Number
Word 2	Pointer to PDW Block

Word 2 contains the address of a 5 word PDW block which contains the PDW data in the last four words in standard PDW format. The Supervisor is expected to clear the flag word in a high priority message buffer to zero when it is through processing a message indicating to the NESU that the buffer is available for another message.

The low priority output message buffer consists of 6 words and is used for sending CAM File Dump messages and AOA File Dump messages. The first word is a flag word whose contents have the following meaning:

0	Buffer Empty
1	CAM File Dump message
2	AOA File Dump message

The CAM File Dump message has the following format:

Word 0	1
Word 1	File Number
Word 2	Valid Field Contents
Word 3	Count Field Contents
Word 4	Azimuth Field Contents
Word 5	Frequency Field Contents

The AOA File Dump Message has the following format:

Word 0	2
Word 1	Cell Number
Word 2	Count

The Supervisor must clear the flag word to zero when it is through processing the message indicating that the buffer is available for another message.

The PDW Input Buffer consists of a 4K RAM which is divided into two 2K sub-buffers. The Track Correlator places PDW's into the buffer as a five word entries. The format of the entry is:

Word 0	bit 15	Always one
	bit 8	Unassociated PDW Flag
	bit 7 - 0	TDM File Number
Word 1 - 4	Standard PDW Format	

When the NESU begins processing a sub-buffer, it commands the TC to switch to the other buffer. Each PDW is copied into a core block obtained from the Core Manager and the first word of the entry is set to zero. The PDW is then processed and the next entry examined. If an entry is found with its first word all zeros, the NESU commands the TC to swap buffers and it starts searching the sub-buffer that was being filled by the TC for incoming PDW's. All PDW entries with bit 8 of the first word reset are assumed to be Supervisor PDW's and the NESU sends a Supervisor PDW message and generates a New Emitter Alert interrupt to the Supervisor. All other PDW entries are used to attempt to generate New Emitter Parameters.

The Purge flag is set by the Supervisor every 250 ms. The NESU Main Program checks the flag periodically at a rate depending on the number of messages and PDW's arriving. When the NESU Main Program finds the Purge Flag set, it clears the flag and searches the Emitter File for all entries which have their Purge bit set and a count equal to one. For each entry found, the valid bit in the CAM is cleared, and any PDW blocks linked to the entry are returned to free core storage. The AOA File entry for the particular azimuth cell is decremented for each PDW returned. The Main Program then searches the Emitter File for all entries which have their Purge bit set with a count greater than one. For all entries found the count is decremented by one and the oldest PDW block returned to free core storage. An AOA File Entry is decremented for each PDW returned corresponding to the PDW azimuth cell. The Purge bit is then set on all remaining entries in the Emitter File.

3.2.3 CORE MANAGER

The Core Manager consists of two subroutines: The Get Block subroutine and the Return Block subroutine. Dynamic memory storage is

arranged into blocks of five words apiece and linked into a single queue of available core blocks. This queue is shared by the Supervisor and the NESU in a common 4K 2-port RAM which also contains the SOQ and EOQ pointers. The queue is initially linked by the Supervisor initializer module and maintained by both the Supervisor and NESU Core Managers. A core block is obtained by issuing the following call:

JSUB (G=TBL)

The Get Block routine removes a block from the queue and returns to the calling routine with the address of the block in the X-register. One or more blocks are returned by issuing the following call:

JSUB (=RTBL)

The X-register must contain the address of the first block and the B-register must contain the address of the last block. The first word of each block must contain the address of the next successive block with the first word of the last block containing zero. If only one block is being returned, the first word of the block must contain zero and both the X register and the B-register must contain the address of the block.

3.2.4 PDW BUFFER INTERRUPT HANDLER

The PDW Buffer Interrupt Handler processes all PDW Input Buffer interrupts. An interrupt is received from the Track Correlator whenever it reaches the end of a sub-buffer indicating that it has filled a sub-buffer before the NESU has finished processing the previous buffer. The PDW Buffer Interrupt Handler sets the PDW Buffer Full flag upon an interrupt and performs an interrupt return.

3.2.5 BUS HUNG INTERRUPT HANDLER

The Bus Hung Interrupt Handler processes all Bus Hung Interrupts. When an interrupt is received, the interrupt handler sends an error message to the Supervisor, saves all registers and halts.

3.2.6 EMITTER FILE

The Emitter File contains 32 8-word entries; one for each track file in the NESU CAM. The format of each entry is:

Word 0	Flags
Word 1	PDW SOQ Pointer
Word 2	PDW EOQ Pointer
Word 3	PDW Count
Word 4	Azimuth
Word 5	Frequency
Word 6-7	Time of Arrival of last PDW

flag bits (if set):

15	Valid
14	New Emitter File
13	Purge

The valid bit indicates that the file is active. The New Emitter File bit indicates that a New Emitter File has been generated and sent to the Supervisor, and that all PDW's that match the file are to be dropped. The purge bit is used for purging entries as described in paragraph 3.2.2. Words 1 and 2 point to a list of PDW blocks currently linked to the entry. The first word in each block contains the address of the next successive block. The last block contains a zero in its first word. Word 3 contains the count of blocks which have been linked. Word 4 contains the azimuth value written into the CAM and Word 5 contains the frequency value written into the CAM. Words 6 and 7 contain the TOA of the last linked PDW.

3.2.7 AOA FILE

The AOA File consists of 64 1-word entries, one for each angle cell. For each PDW linked to an Emitter File entry, the AOA File entry corresponding to the azimuth is incremented. This file is used by the NESU Main Program for detecting agile emitters.

3.3 STORAGE AND PROCESSING ALLOCATION

The following table summarizes the storage and processing time for the NESU Software:

Initialization Module	200 words	1.0 ms.
Main Program	800 words	4.0 ms.
Get Block Subroutine	20 words	60 micro-second
Return Block Subroutine	30 words	90 micro-second
PDW Buffer Interrupt Handler	20 words	60 micro-second
Bus Hung Interrupt Handler	20 words	60 micro-second
Emitter File	256 words	N/A
AOA File	64 words	N/A
Free Core Storage	1600 words	N/A
PDW Input Buffer	4096 words	N/A
TOTAL	7106 words	

The processing time of the NESU Main Program varies depending on the steps being performed. The processing time for various actions are:

Supervisor message	50 micro-seconds to 2 ms.
Supervisor PDW	150 micro-seconds
Link PDW to Emitter Entry	300 incro-seconds
Generate New Emitter	4.0 ms.
Discard PDW	240 micro-seconds

The processing load per second of the steady-state condition of 570 Supervisor PDW's, 1000 unassociated PDW's, and 5 new emitters being generated is

Supervisor PDW	85.5 ms.
Link PDW to Emitter Table	15.0 ms.
Generate New Emitter	20.0 ms.
Discard PDW	133.0 ms.
TOTAL	253.5 ms./second

3.4 FUNCTIONAL FLOW DIAGRAM

Figure 3.1 shows the overall operation of the NESU Main Program. Figure 3.2 shows the New Track Generation Procedure.

3.4.1 PROGRAM INTERRUPTS

The hardware interrupts received by the NESU in order of priority are:

Bus Hung Interrupt

PDW Input Buffer Interrupt

The Bus Hung Interrupt indicates a software malfunction in which non-existant device or memory location was referenced. This is considered a non-recoverable error requiring reloading of the NESU Software. The PDW Input Buffer interrupt is generated when the TC fills a sub-buffer with PDW's. This normally happens when the NESU is unable to keep up with the incoming PDW rate. The size of the sub-buffers is set such that there are enough PDW's in the sub-buffer to allow the NESU to generate 30 new tracks in a cold start situation.

3.5 PROGRAMMING GUIDELINES

The NESU software is coded in RP-16 Assembly Language and assembled with the RP 16 Relocatable Assembler (RAMA). The software is loaded into the NESU RAM by the System Controller which loads a loading routine into the 1K RAM common to the Supervisor Micro-Processor, performs an Initialize and New Start Sequence, and sends the object text to the loading routine.

3.6 QUALITY ASSURANCE

TBD

FLOW CHART	REMARKS

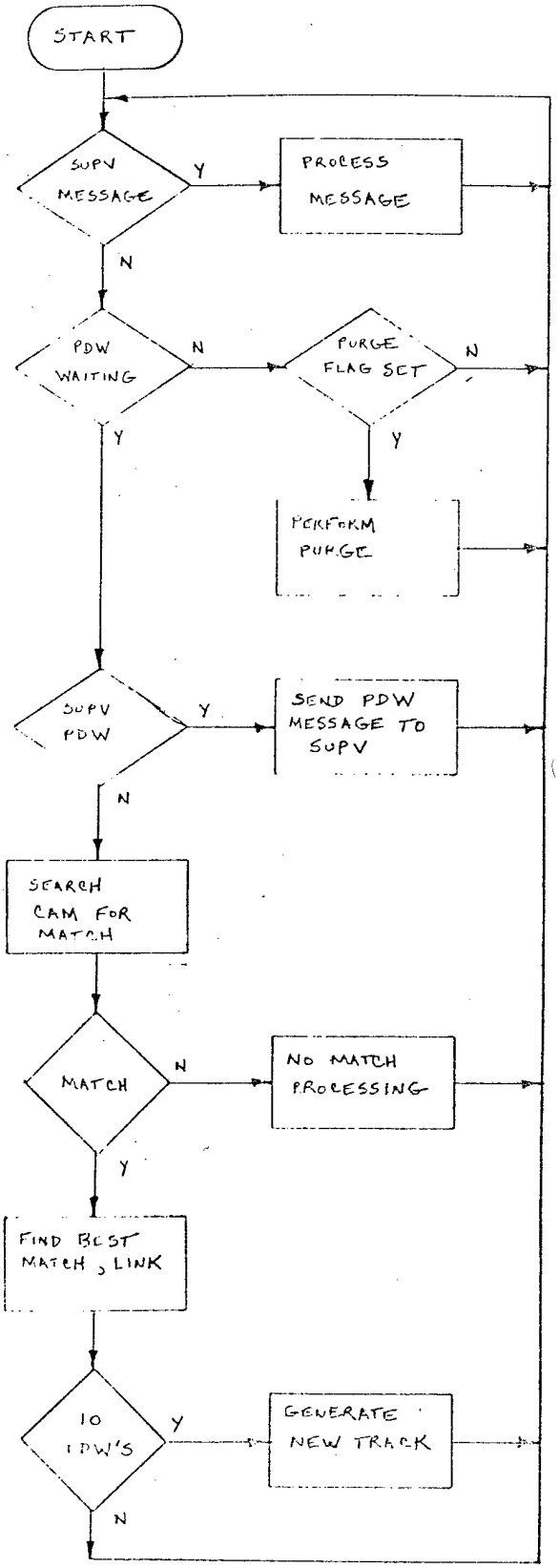

FIGURE 3.1

RAYTHEON COMPANY
LEXINGTON, MASS 02173

NESU MAIN PROGRAM

49956 | PREPARED BY | DATE

SHEET 1 OF 1

FLOW CHART | REMARKS

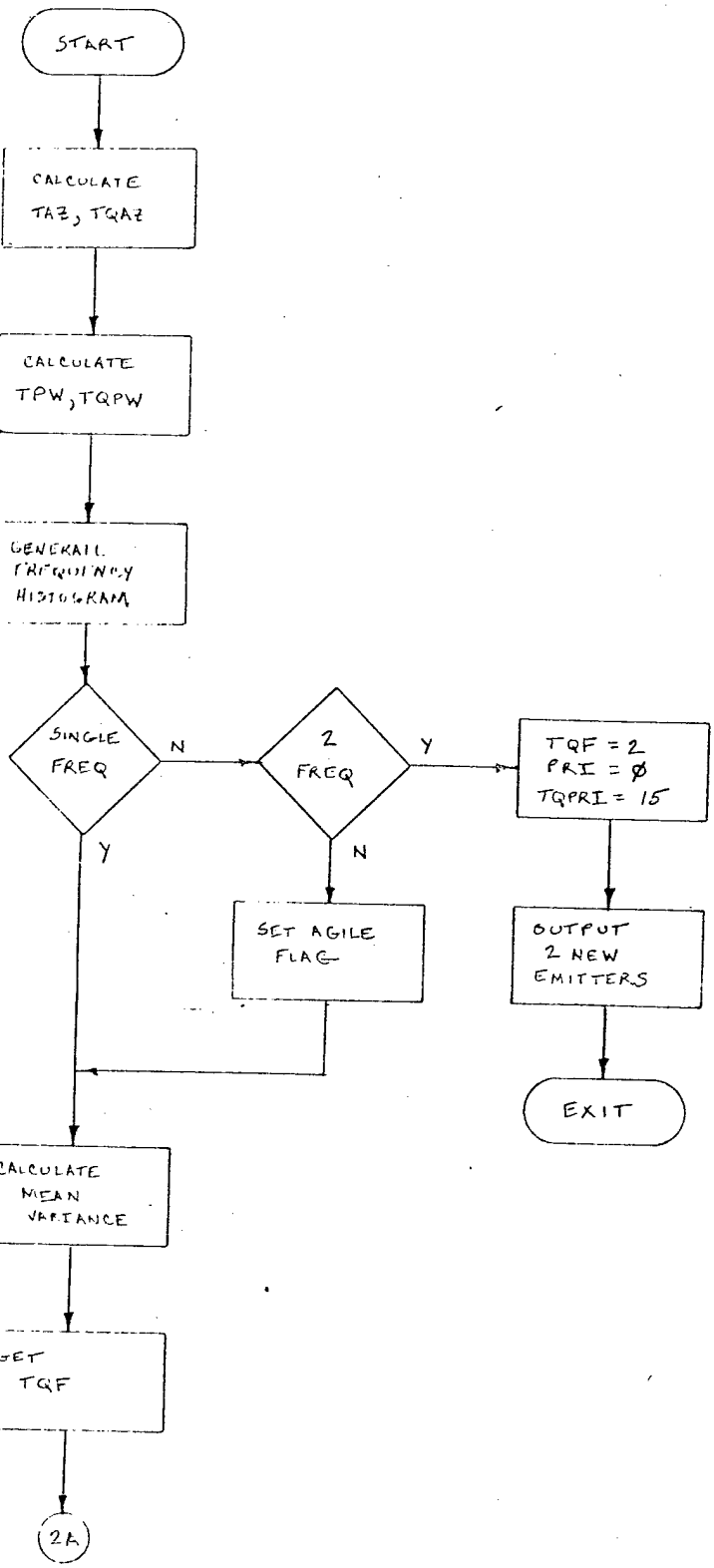

FIGURE 3.2

RAYTHEON

RAYTHEON COMPANY
LEXINGTON, MASS 02173

PROGRAM/ROUTINE/SUBROUTINE/ACRONYM
GENERATE TRACK

49956 | PREPARED BY | DATE

SHEET 1 OF 2

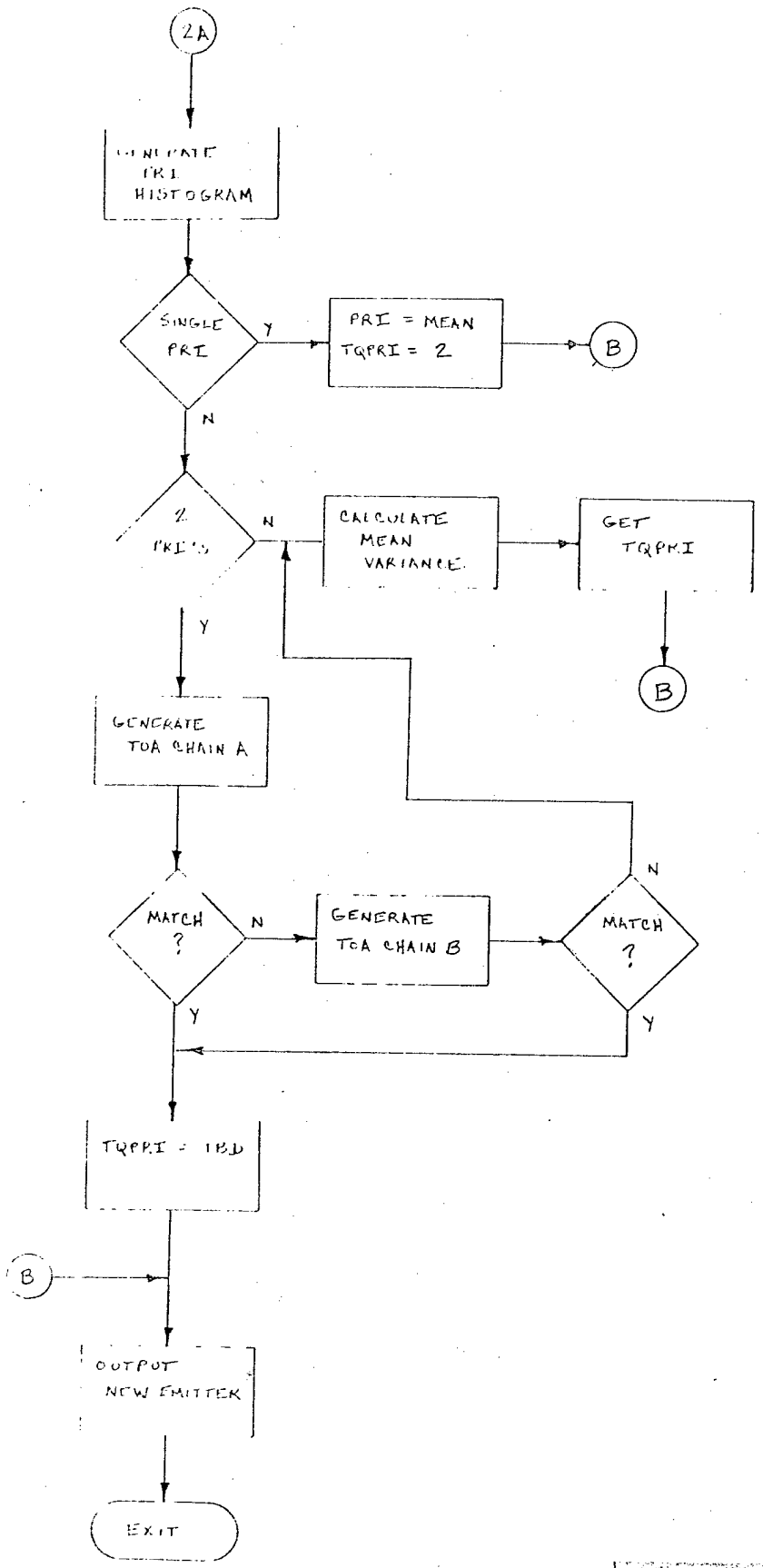

FIGURE 3.2 (CONT.)

RAYTHEON COMPANY
LEXINGTON, MASS 02173

PROGRAM/ROUTINE/SUBROUTINE/ACRONYM
GENERATE TRACK

CODE IDENT NO 49956
PREPARED BY
DATE
NUMBER
SHEET 2 OF 2

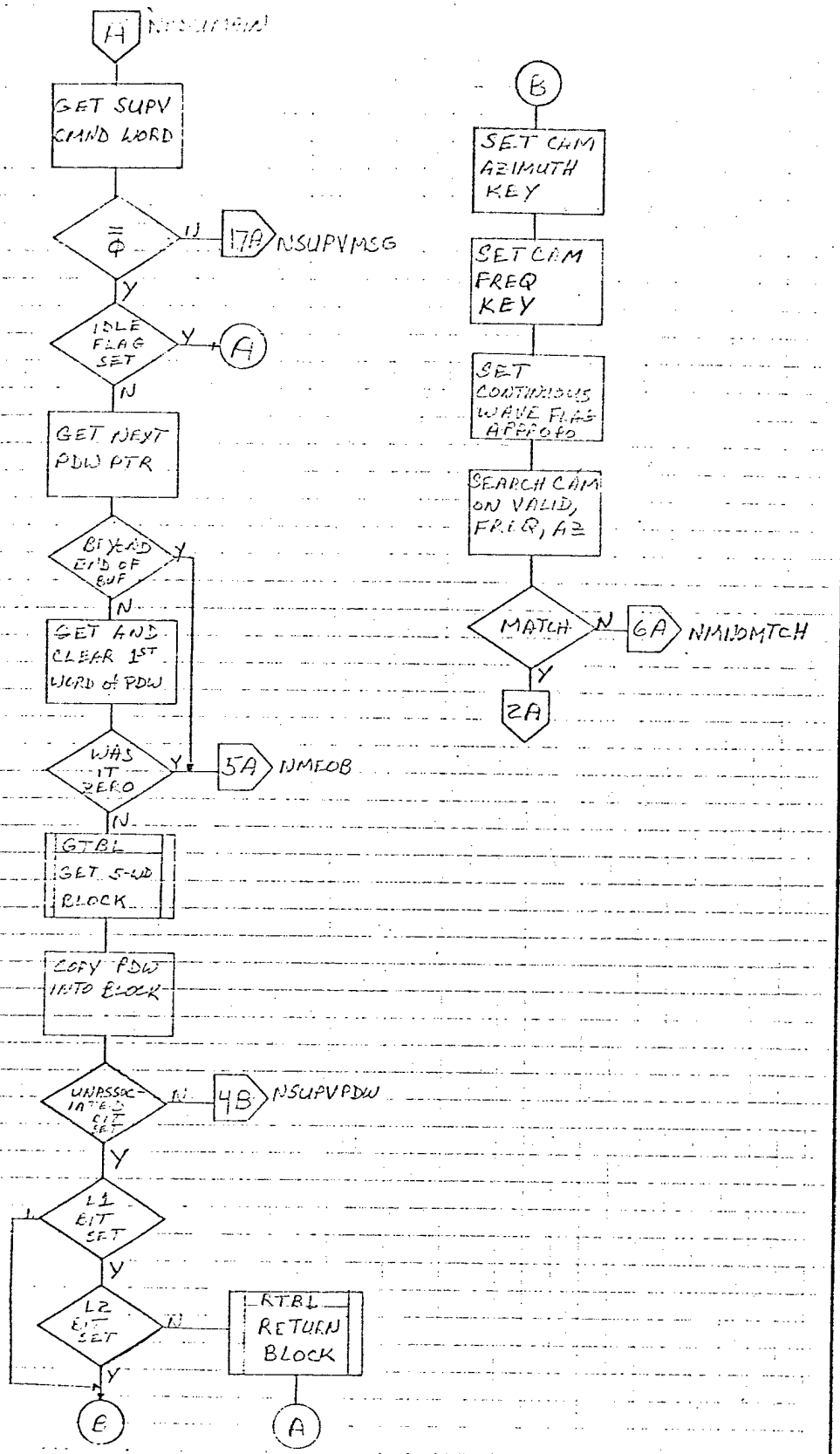

NESUMAIN IS THE ROOT OF THE NESU TREE

SUPERVISOR REQUESTS TAKE PRIORITY OVER PDW PROCESSING

MATCH RETURNS INDEX TO START OF CORRESPONDING EMFL TABLE ENTRY

ONLY THE LAST PDW DESCRIBING A LONG PULSE IS USED

NOTE: 7B DENOTES SHEET 7 LABEL B

RAYTHEON

RAYTHEON COMPANY
LEXINGTON, MASS 02173

PROGRAM ROOT NETSUBROUTINE ACRONYM

IEMS-SORTER - NESU (DETAIL)

49956	G.G. LONARDO	DATE
NUMBER MAIN	SHEET 1 OF 19	

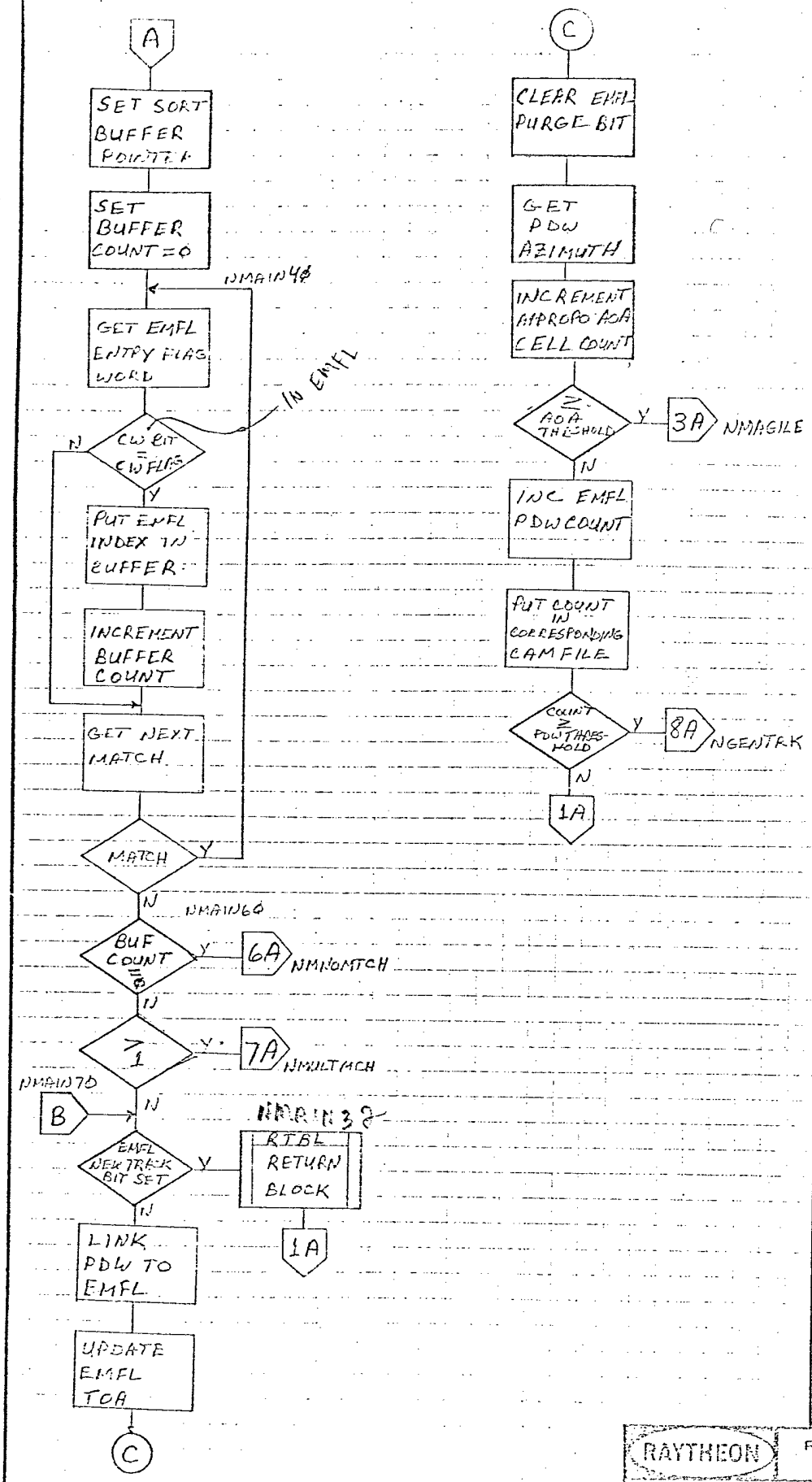

FREQUENCY AGILE EMITTER CHECK

A PDW MATCH MUST INCLUDE AZIMUTH, FREQUENCY AND CONTINUOUS WAVE

TRTH - NUMBER OF PDWS REQUIRED TO GENERATE NEW TRACK

IGNORE PDW MATCHING FILE RECENTLY SENT TO SUPERVISOR

EMFL TOA AND PURGE BIT ARE USED TO PURGE NOISE AND "OLD" ENTRIES

RAYTHEON COMPANY
LEXINGTON, MASS 02173

PROGRAM ROUTINE SUBROUTINE ACRONYM
LEWIS SORTER - NESU

49956 PREPARED BY DATE

NUMBER MAIN SHEET 2 OF 19

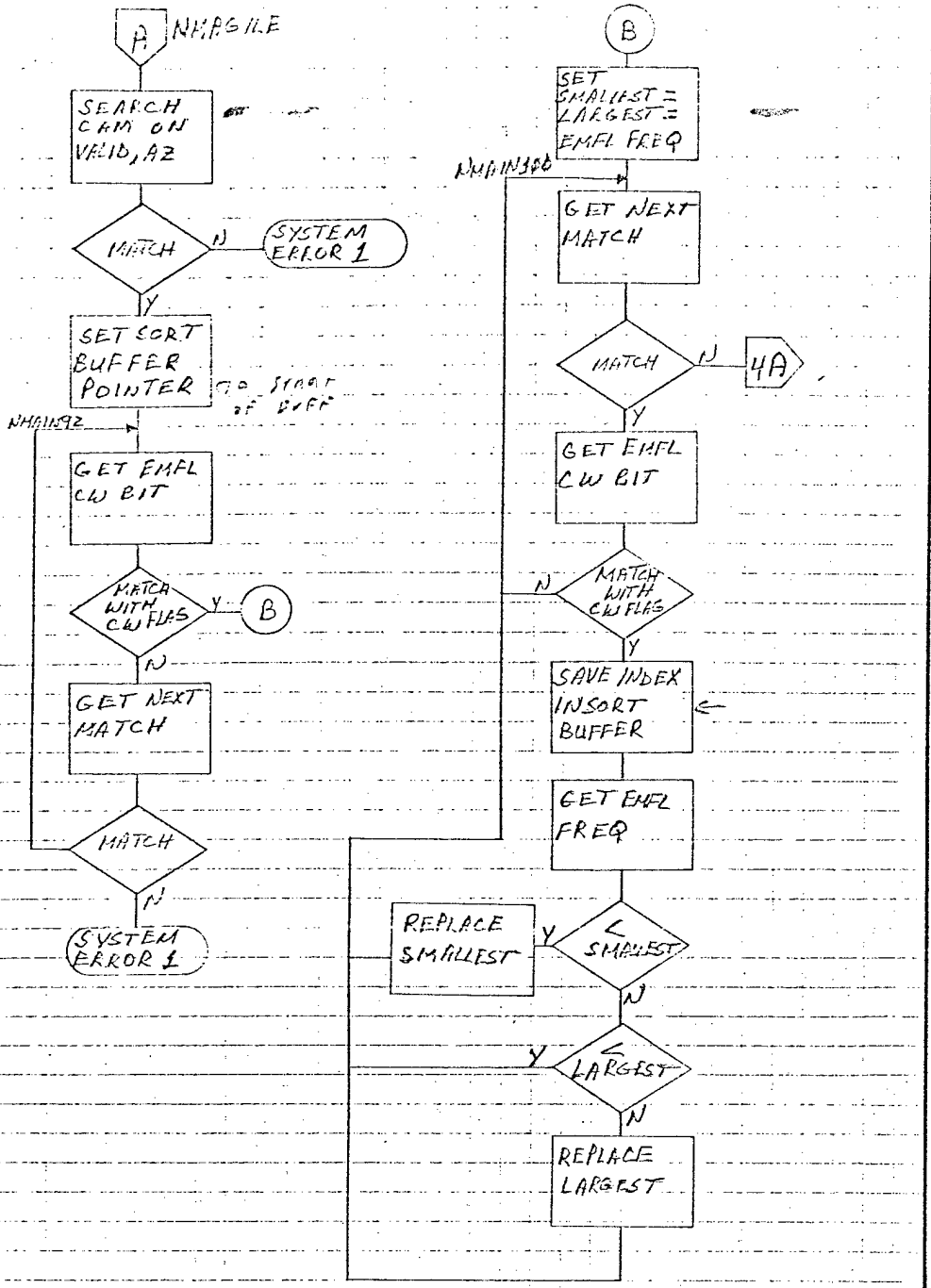

RAYTHEON

RAYTHEON COMPANY
LEXINGTON, MASS. 02173

PROGRAM ROUTINE SUBROUTINE ACRONYM
IEWS SORTER - NESU

49956	PREPARED BY	DATE
NUMBER AGILE MERGE	SHEET 3 OF 17	

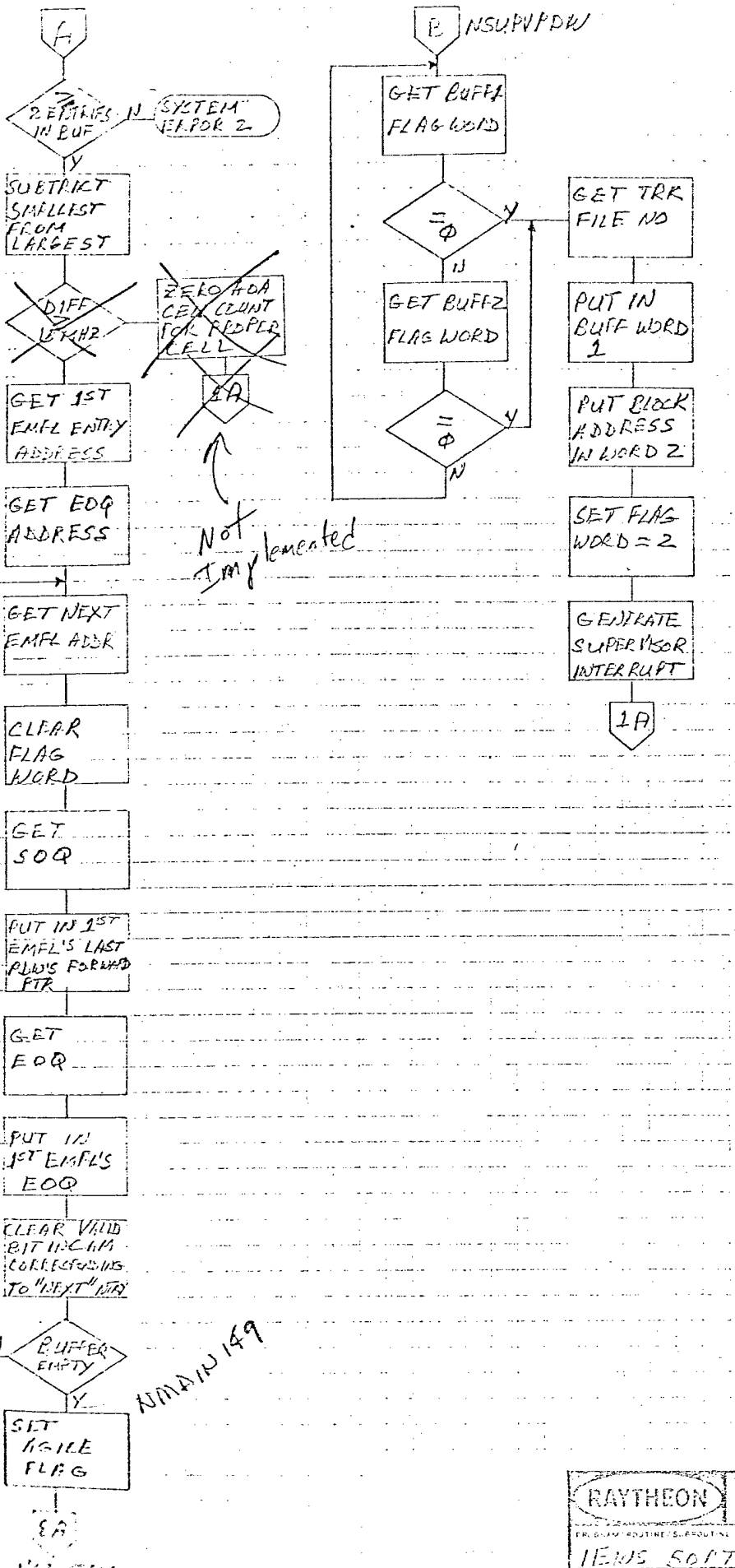

RAYTHEON	RAYTHEON COMPANY, LEXINGTON, MASS. 02173
PROGRAM/ROUTINE/SUBROUTINE NAME	NEWS SORTER – NESU
49956	PREPARED BY / DATE
NUMBER SUPV FLOW	SHEET 4 OF 19

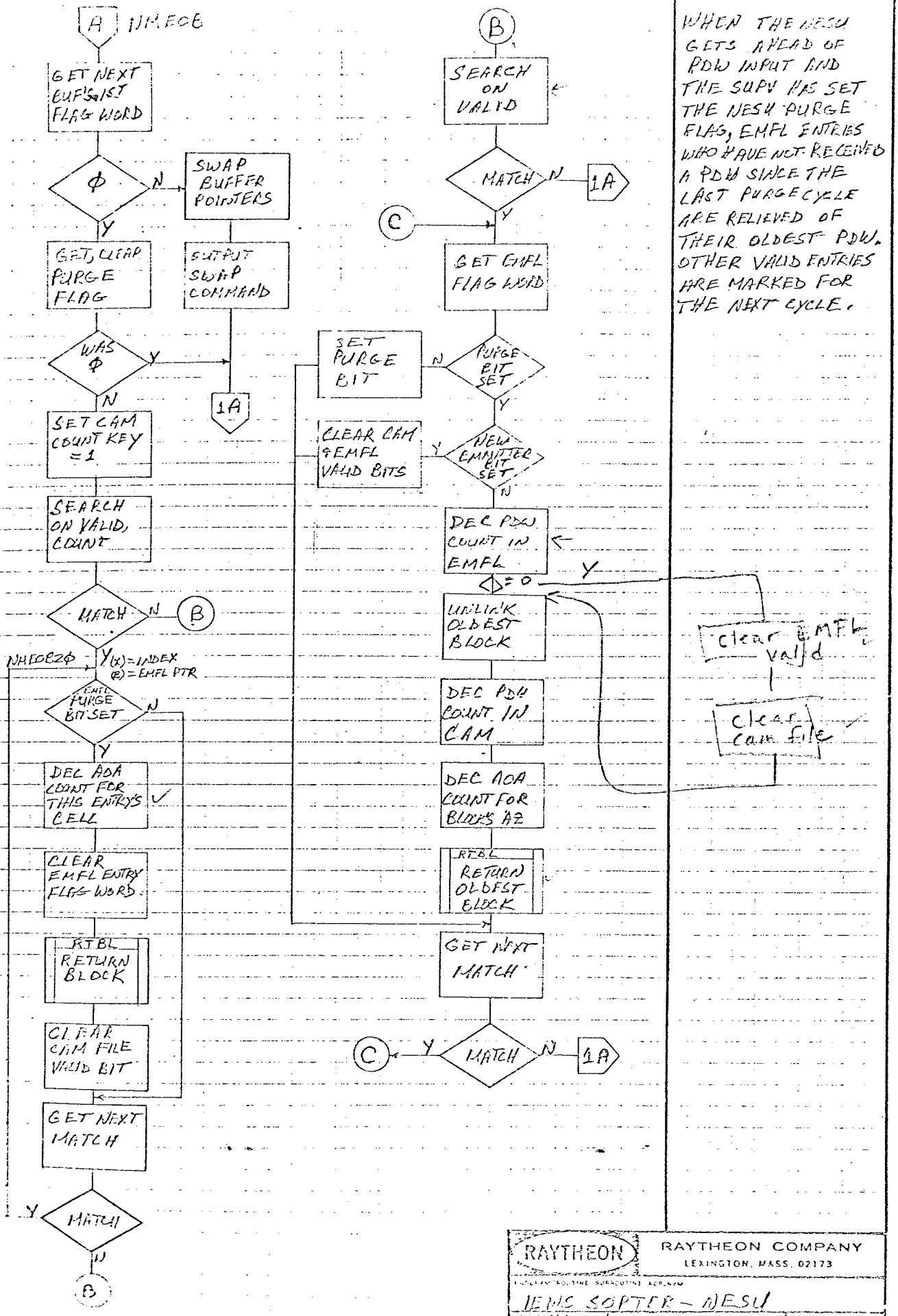

WHEN THE NESU GETS AHEAD OF PDW INPUT AND THE SUPV HAS SET THE NESU PURGE FLAG, EMFL ENTRIES WHO HAVE NOT RECEIVED A PDW SINCE THE LAST PURGE CYCLE ARE RELIEVED OF THEIR OLDEST PDW. OTHER VALID ENTRIES ARE MARKED FOR THE NEXT CYCLE.

RAYTHEON COMPANY
LEXINGTON, MASS. 02173

JENS SOPTER – NESU

49956

NUMBER NMFOR

SHEET 5 OF 19

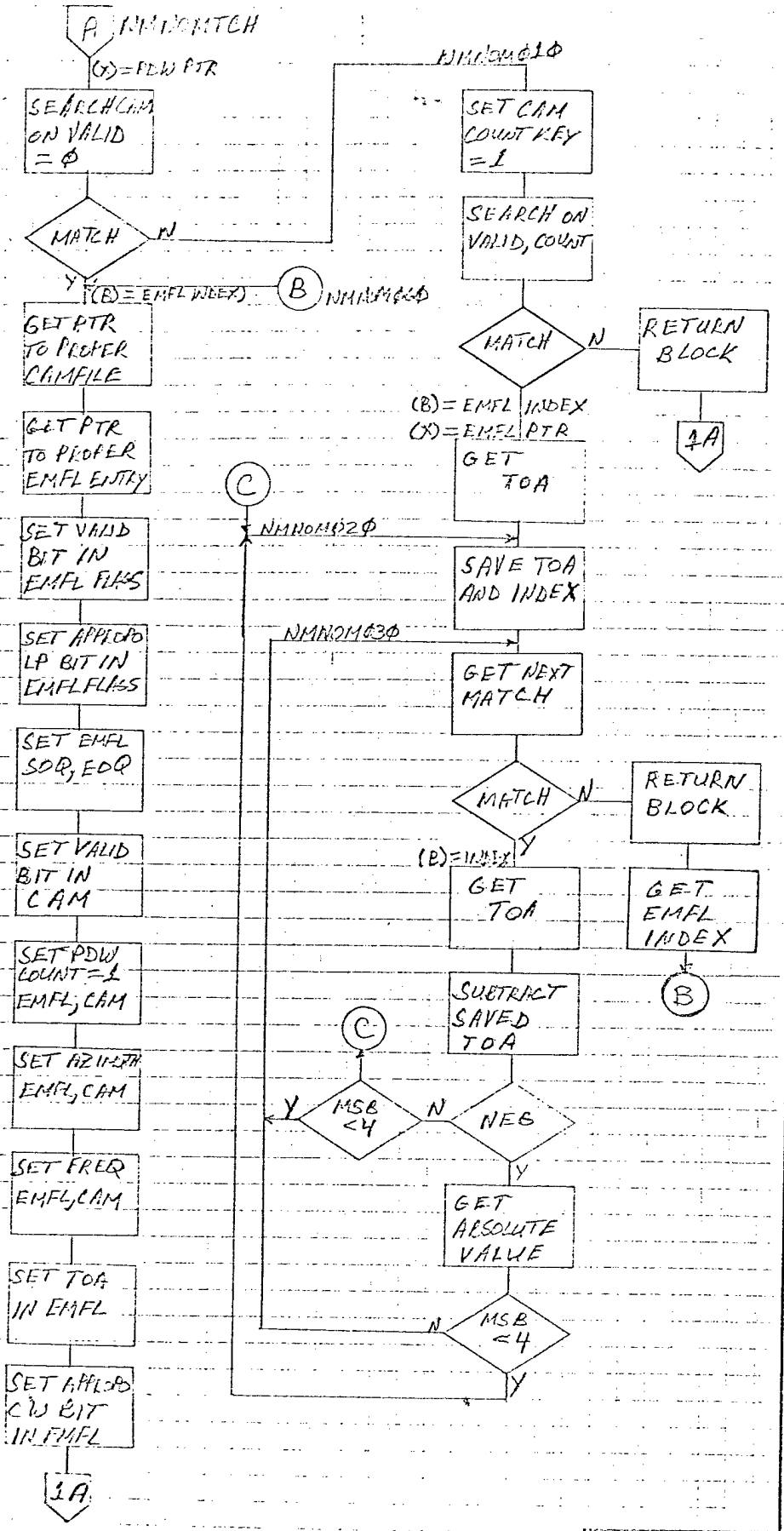

NO MATCH = EMFL FULL
I.E. NEW EMMITTER OVERFLOW

RAYTHEON COMPANY
LEXINGTON, MASS 02173

PROGRAM ROUTINE SUBROUTINE ACRONYM
JEWS SORTER - NFSU

49956 | PREPARED BY | DATE

NUMBER OF WORDS | SHEET 6 OF 19

FLOW CHART

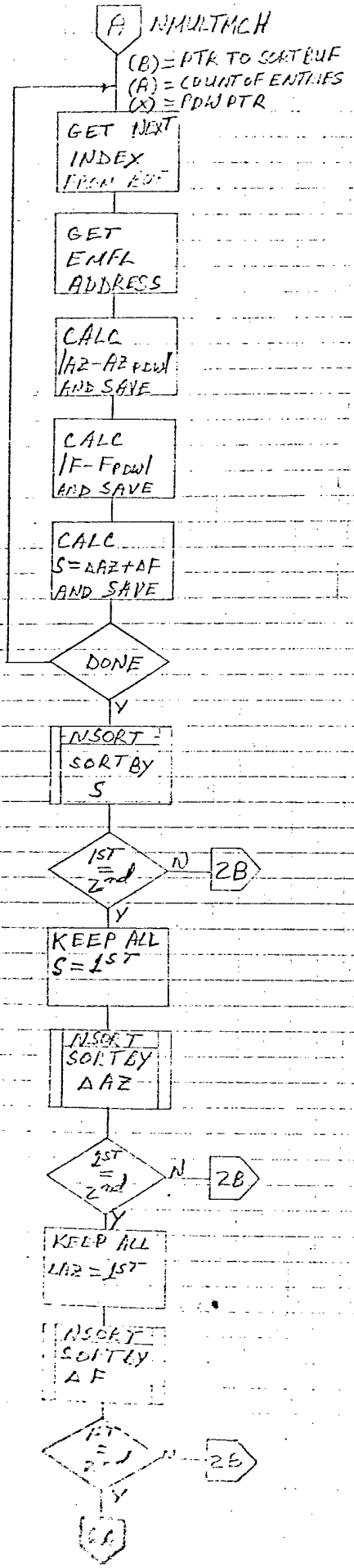

REMARKS

SORTBUF ENTRIES:

WD Ø: EMFL INDEX
WD1: ΔAZ
WD2: Δ·F
WD3: S

RAYTHEON

RAYTHEON COMPANY
LEXINGTON, MASS 02173

PROGRAM ROUTINE/SUBROUTINE/ACRONYM
IFLIS SORTER – NESU

CODE IDENT NO. 49956 | PREPARED BY | DATE

NUMBER MULTI-MATCH | SHEET 7 OF 19

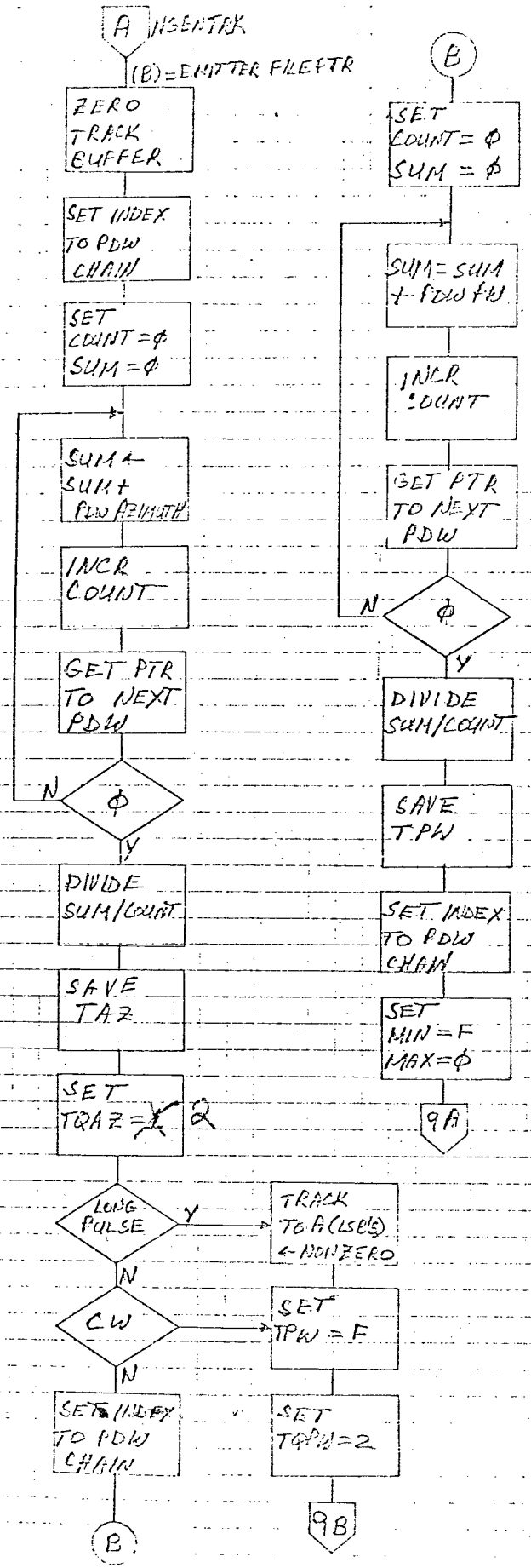

NON-ZERO TOA INDICATES LONG PULSE

RAYTHEON

RAYTHEON COMPANY
LEXINGTON, MASS. 02173

PROGRAM ROUTINE SUBROUTINE/ACRONYM
IEWS SORTER - NESU

CODE IDENT NO. 49956 | PREPARED BY | DATE

NUMBER GENERATE TRACK | SHEET 8 OF 19

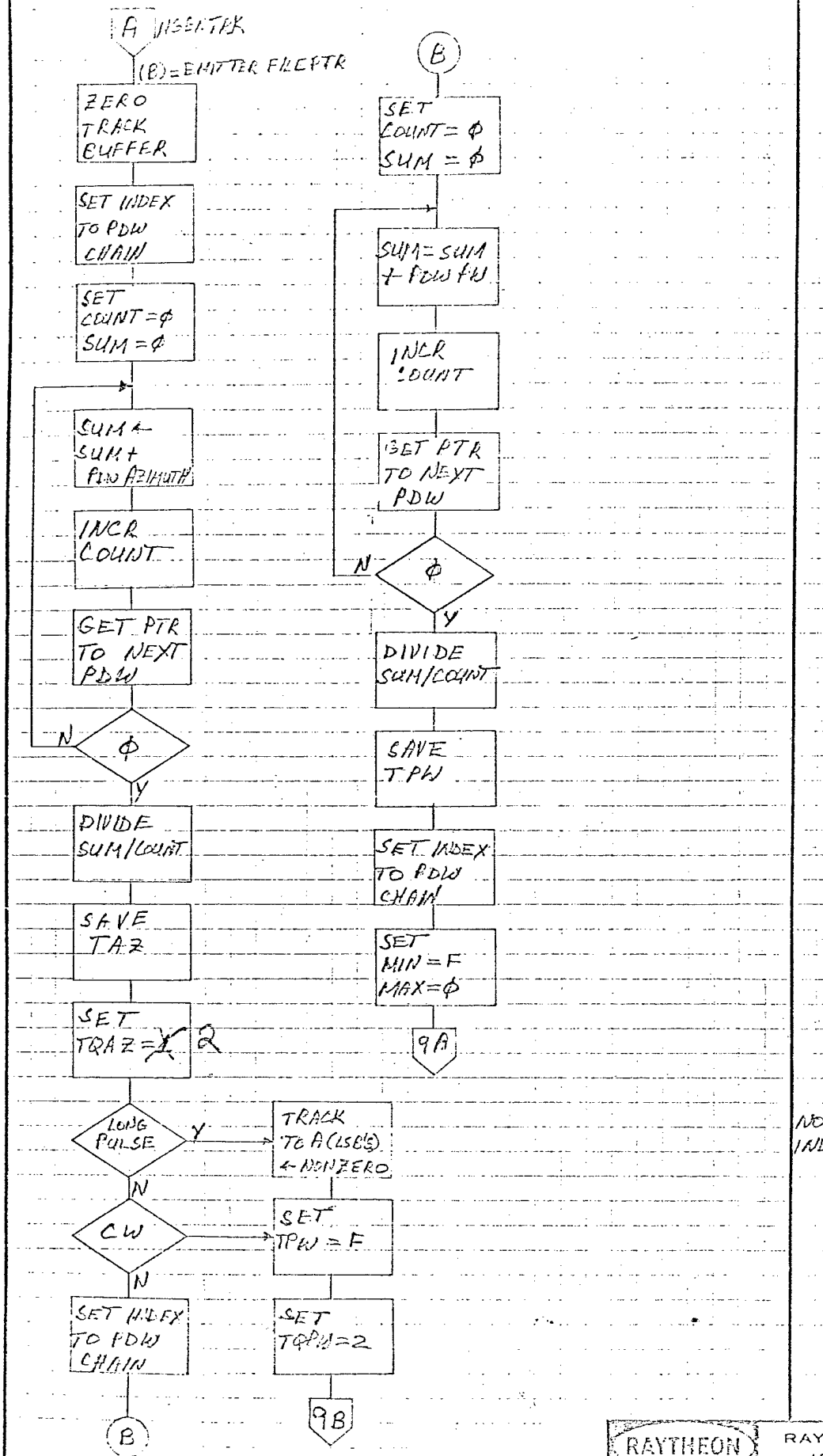

NON-ZERO TOA INDICATES LONG PULSE

RAYTHEON

RAYTHEON COMPANY
LEXINGTON, MASS. 02173

PROGRAM ROUTINE SUBROUTINE ACRONYM
IEWS SORTER - NESU

CODE IDENT NO 49956 | PREPARED BY | DATE

NUMBER GENERATE TRACK | SHEET 8 OF 19

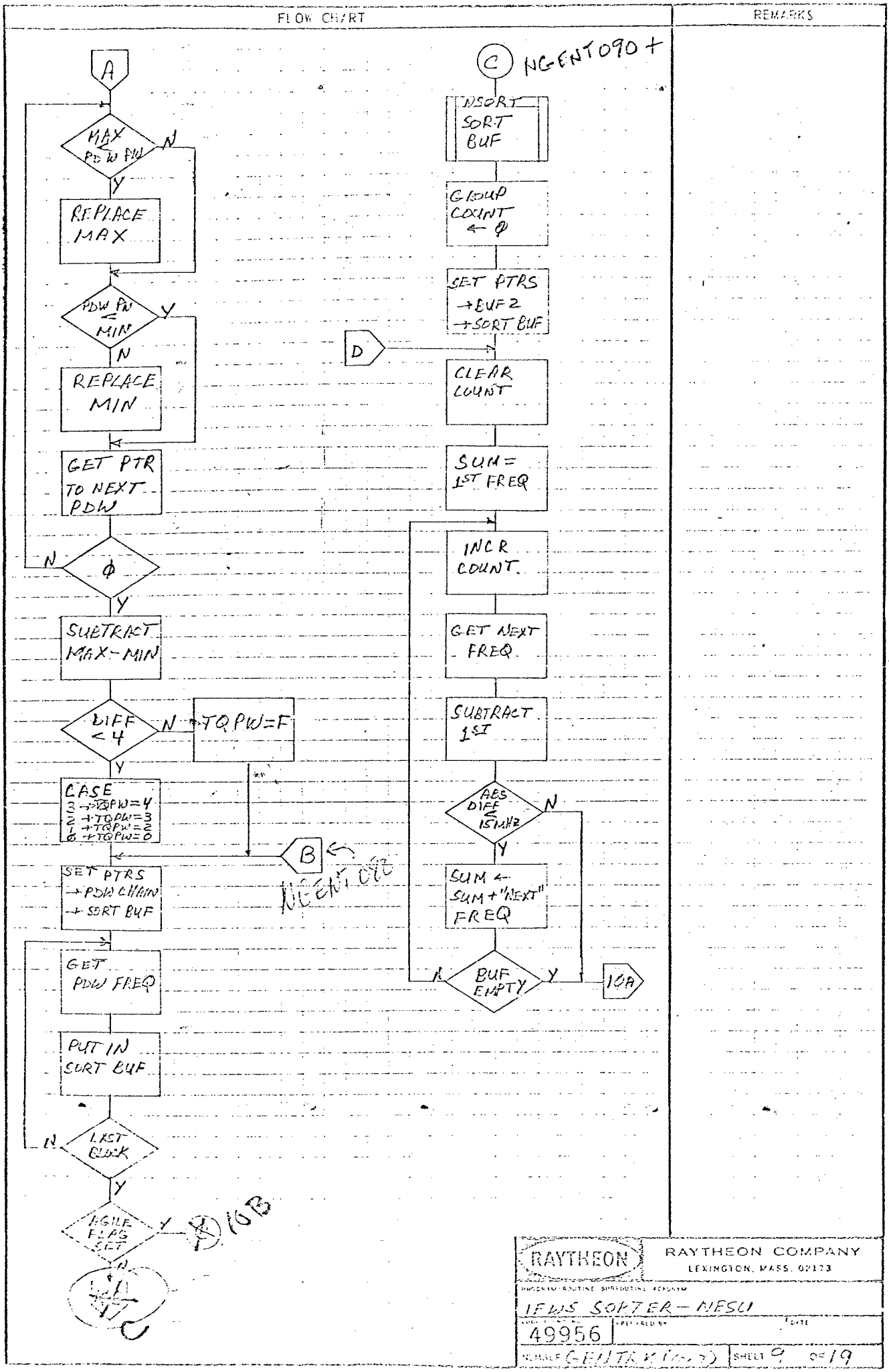

RAYTHEON COMPANY
LEXINGTON, MASS. 02173

IFWIS SORTER – NESU

49956

SHEET 9 OF 19

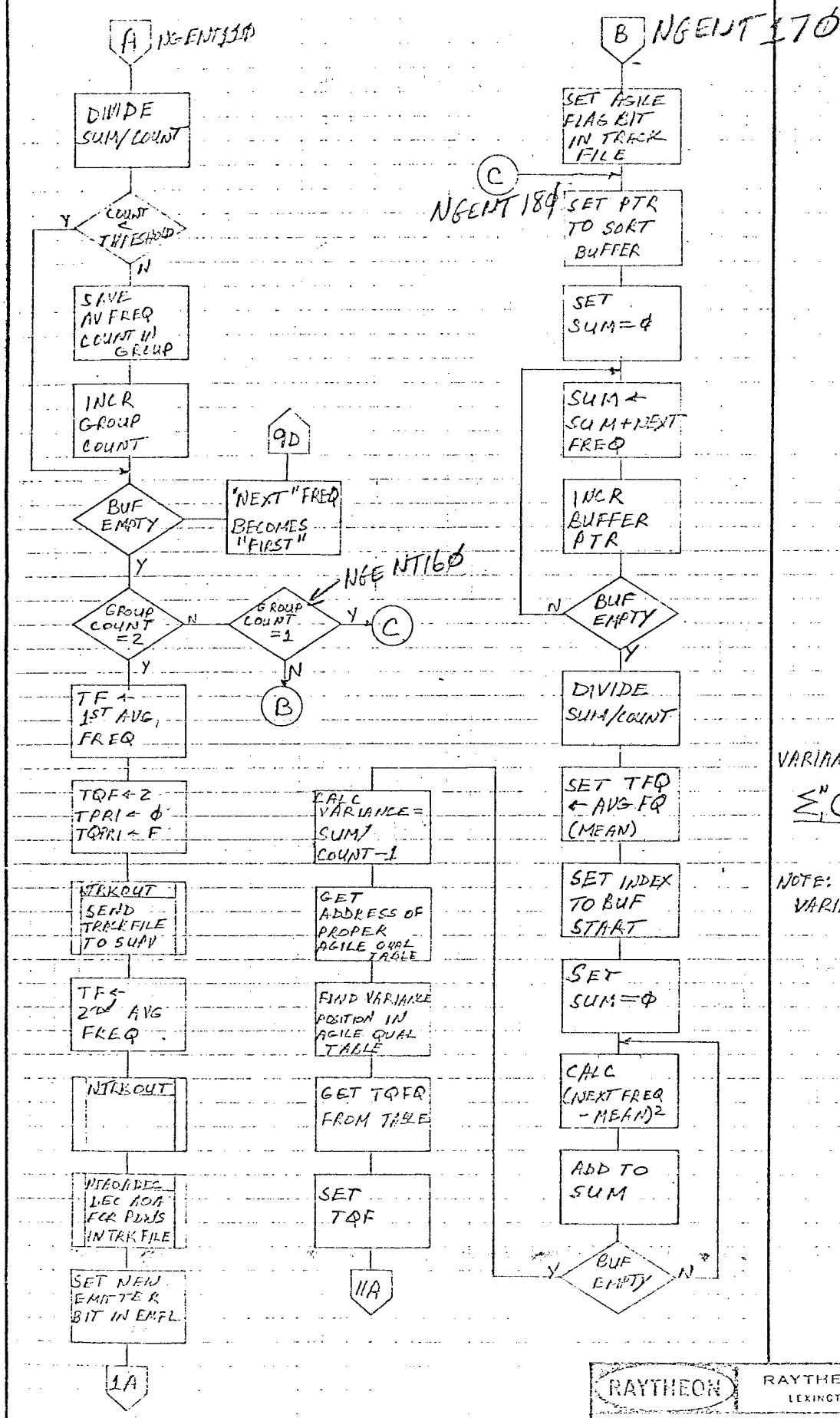

VARIANCE =

$$\frac{\sum_{1}^{N}(\text{FREQ}-\text{MEAN})^2}{(N-1)}$$

NOTE: NOT SAMPLE VARIANCE

RAYTHEON

RAYTHEON COMPANY
LEXINGTON, MASS 02173

PROGRAM ROUTINE SUBROUTINE ACRONYM

JEWS SORTER - NESU

49956

PREPARED BY

DATE

NUMBER GLATIK (FREQ)

SHEET 10 OF 19

PRI CALCULATION

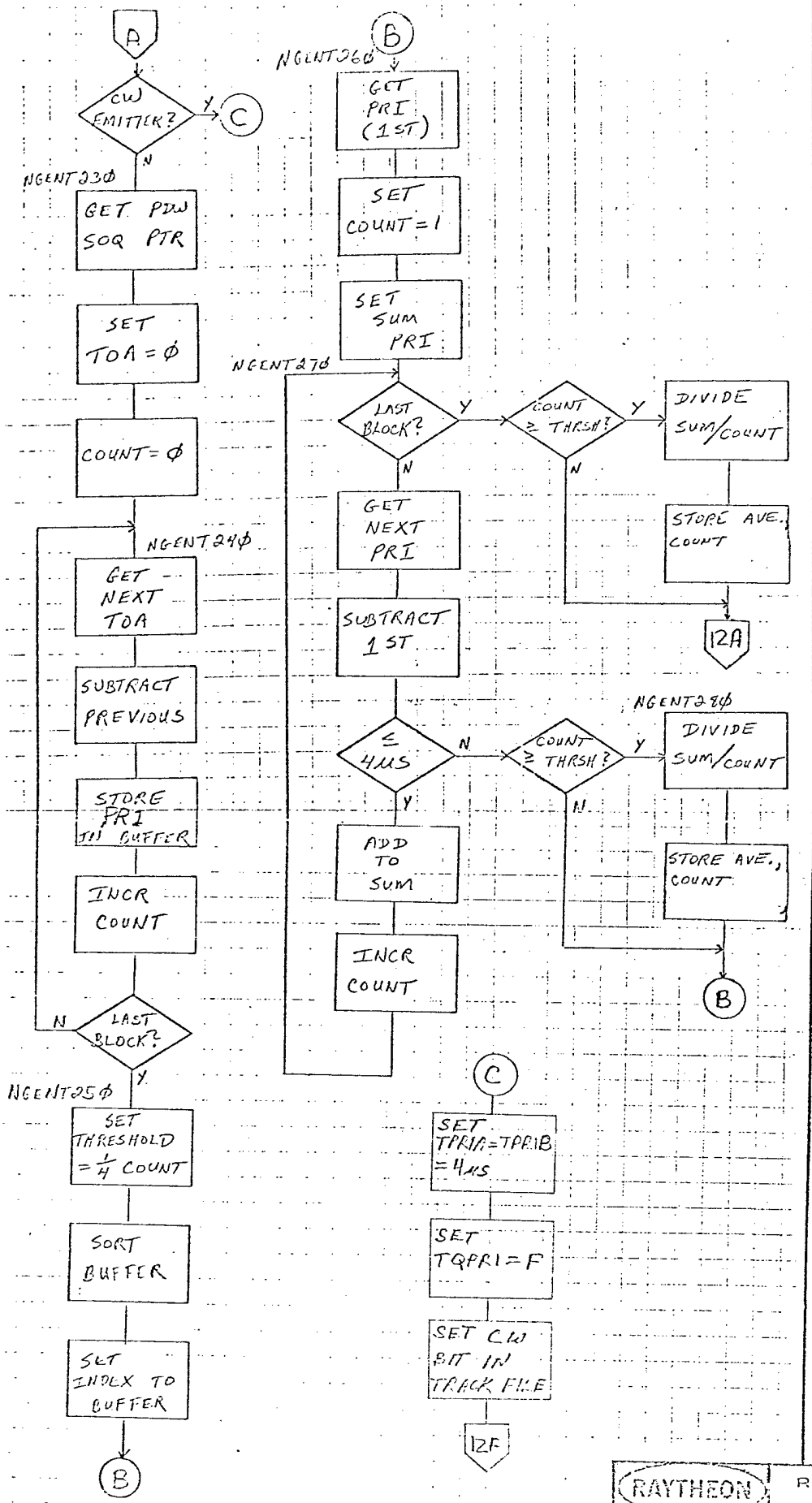

RAYTHEON COMPANY
LEXINGTON, MASS. 02173

IEWS SORTER - NESU

49956

GEN TRK

SHEET 11 OF 19

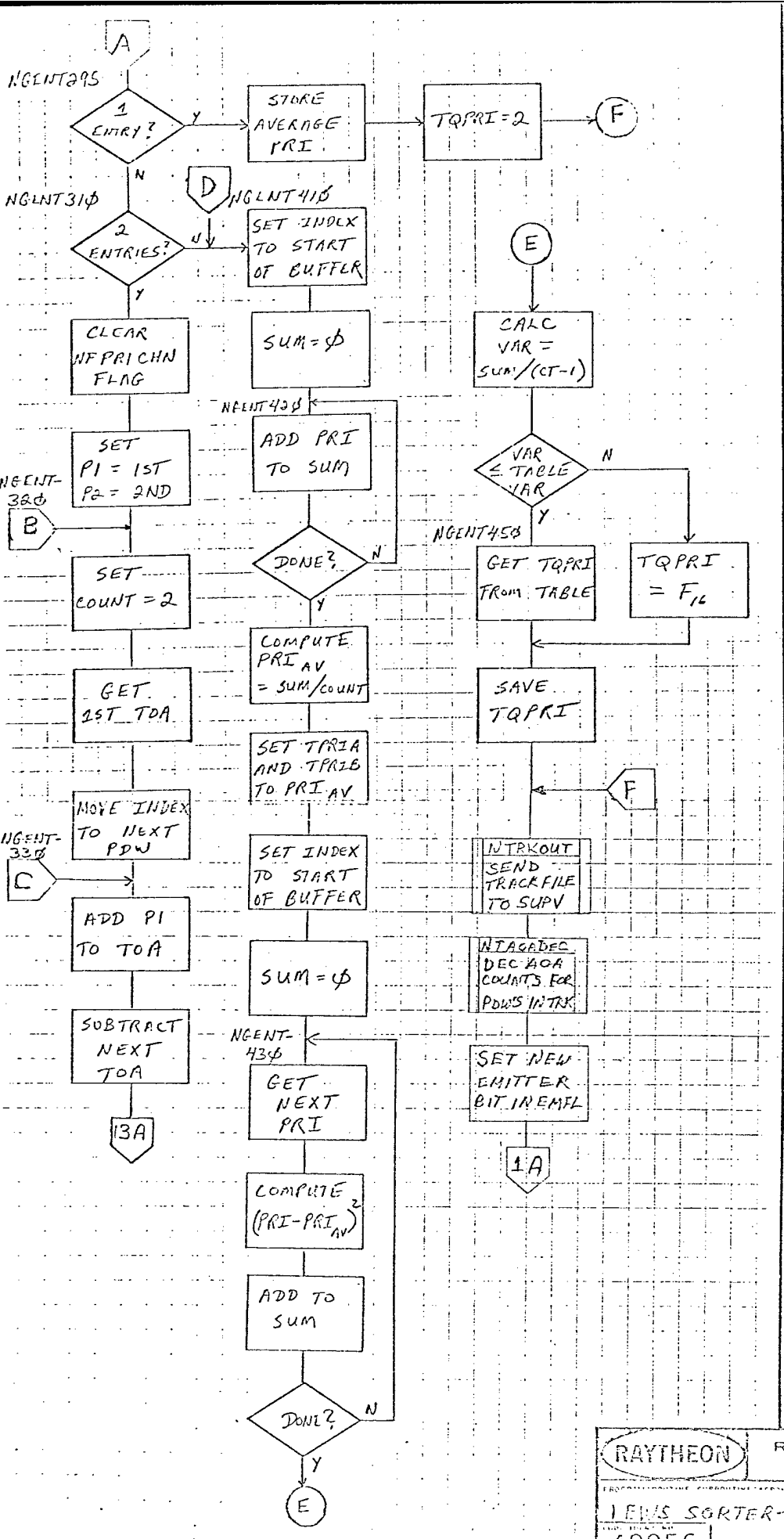

PRI CALCULATION

CHAINING AND VARIANCE CALCULATION

RAYTHEON COMPANY
LEXINGTON, MASS. 02173

IEWS SORTER - NESU

49956

GEN TRK

SHEET 12 OF 10

PRI CHAIN CALCULATION – TOA WRAPAROUND PROBLEM

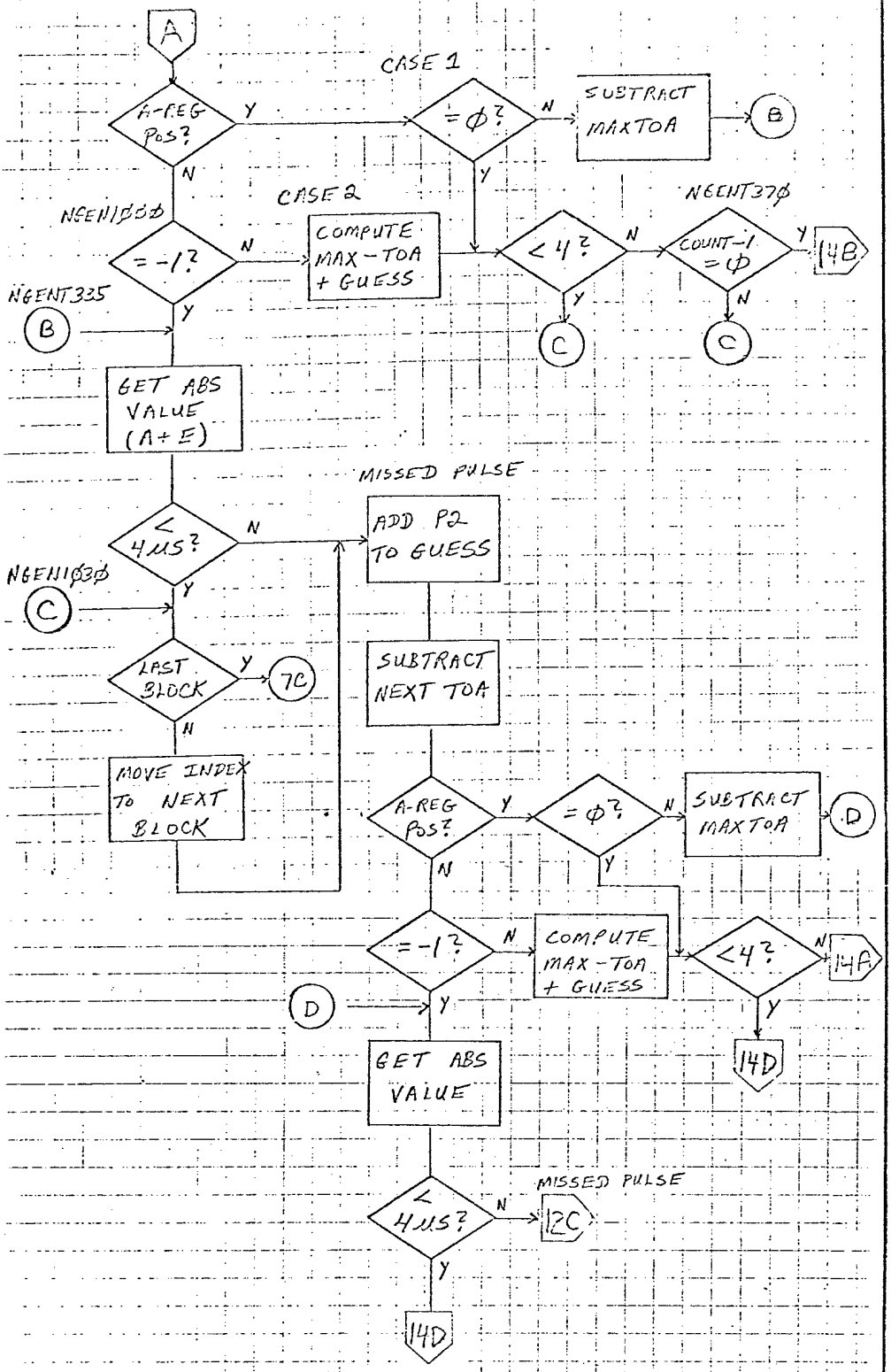

CASE 1 : GUESS = MAX-N N = ∅, 1, 2, 3
ACTUAL = M M = 3, 2, 1, ∅

GUESS - ACTUAL = LARGE POS NO., I.E., MAX-N-M > 2^{16}
THEREFORE, NEED N+M < 4, ELSE POSSIBLE MISSED PULSE.
IF A-REG POS AND NON-ZERO, THEN COMP((GUESS-ACT)-MAX) = N+M

CASE 2 : GUESS = M M = ∅, 1, 2, 3
ACTUAL = MAX-N N = 3, 2, 1, ∅
GUESS-ACTUAL = LARGE NEG. NO., M-MAX-N
THEREFORE, N+M < 4, ELSE ERROR.
IF A NEG AND A ≠ -1, THEN
MAX-ACT GUESS = MAX-(MAX-N)+M = N+M

RAYTHEON COMPANY
LEXINGTON, MASS. 02173

LEWIS SORTER - NESU

49956

SHEET 13 OF 19

PRI CHAIN CALCULATION

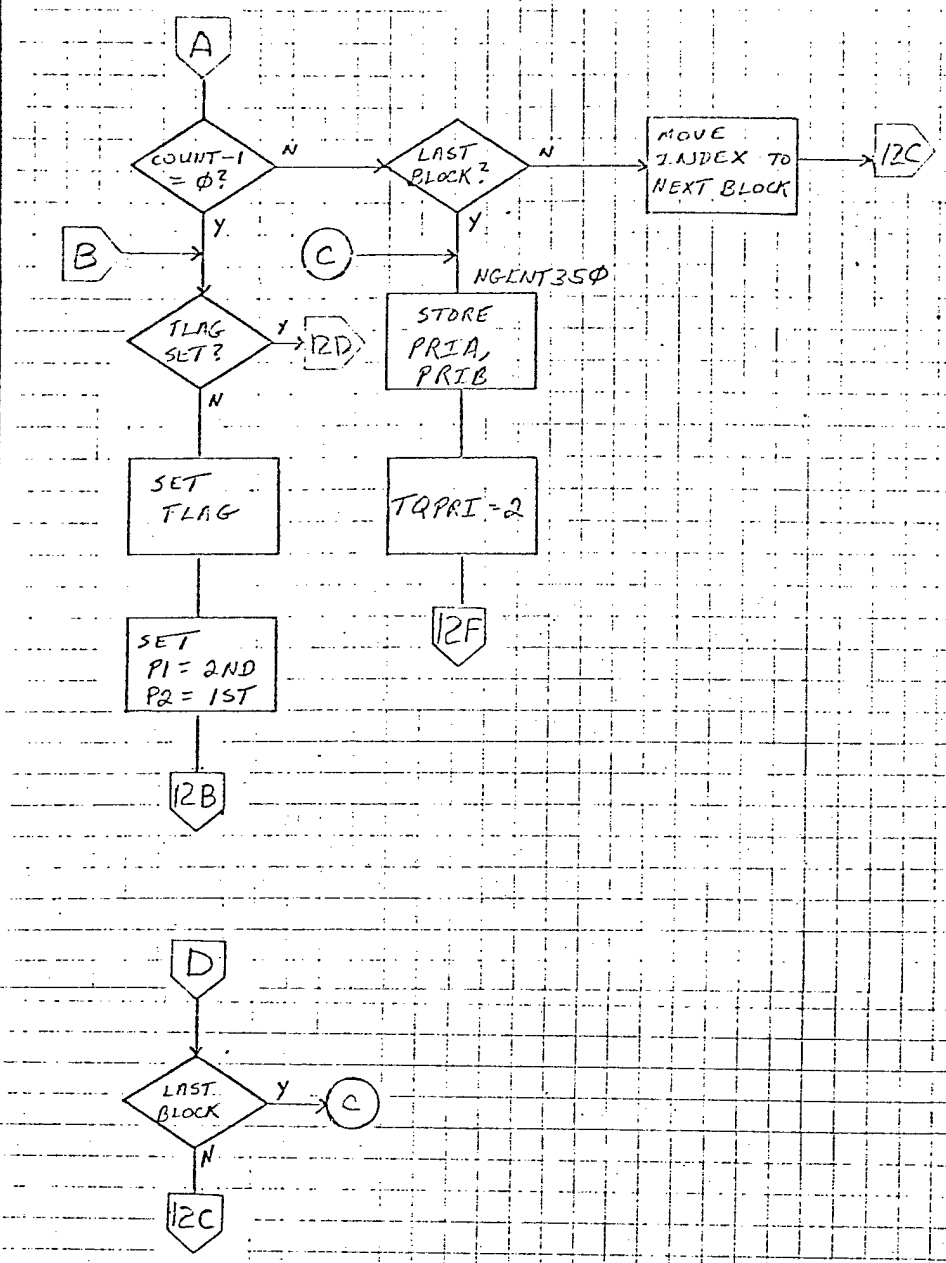

RAYTHEON COMPANY
LEXINGTON, MASS. 02173

PROGRAM TITLE / SUBROUTINE ACRONYM
NEWS SORTER - NESU

CODE IDENT. NO.
49956

NUMBER

SHEET 14 OF 19

FLOW CHART

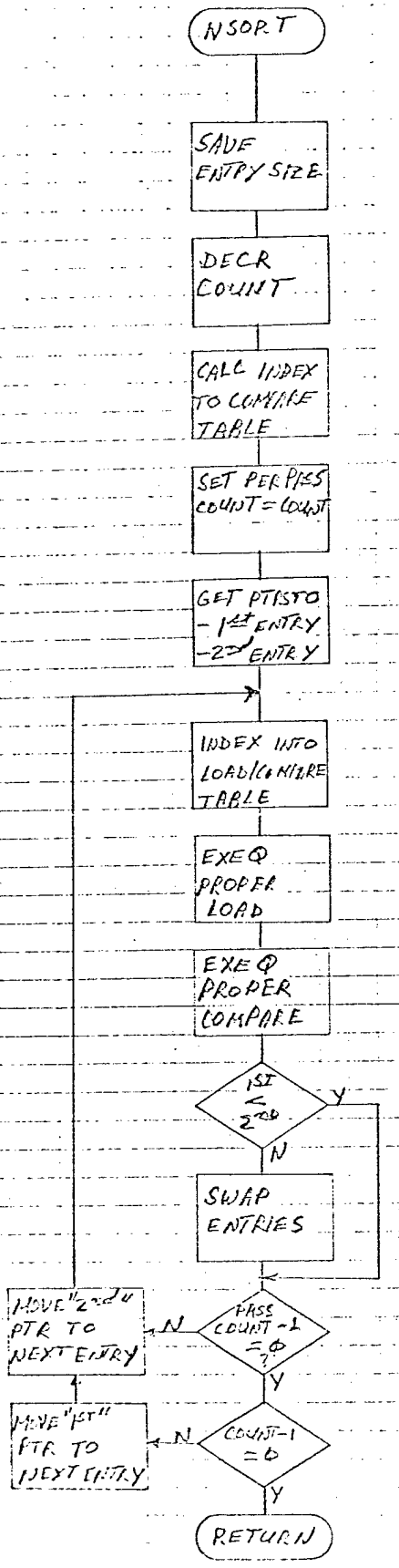

INPUTS:
SORTBUF CONTAINS (E)-WORD ENTRIES
(E) = ENTRIES COUNT (GT 1)
(B) = ENTRY SIZE (MAX=4)
(A) = WORD TO SORT ON (0-3)

REMARKS

I.E. GET WORD FROM 1ST ENTRY

I.E. COMPARE WITH WORD FROM 2ND ENTRY

RAYTHEON COMPANY
LEXINGTON, MASS. 02173

PROGRAM ROUTINE SUBROUTINE ACRONYM
IELIS SORTER - NESU

49956 | PREPARED BY | DATE

NUMBER SOFT | SHEET 15 OF 19

FLOW CHART | REMARKS

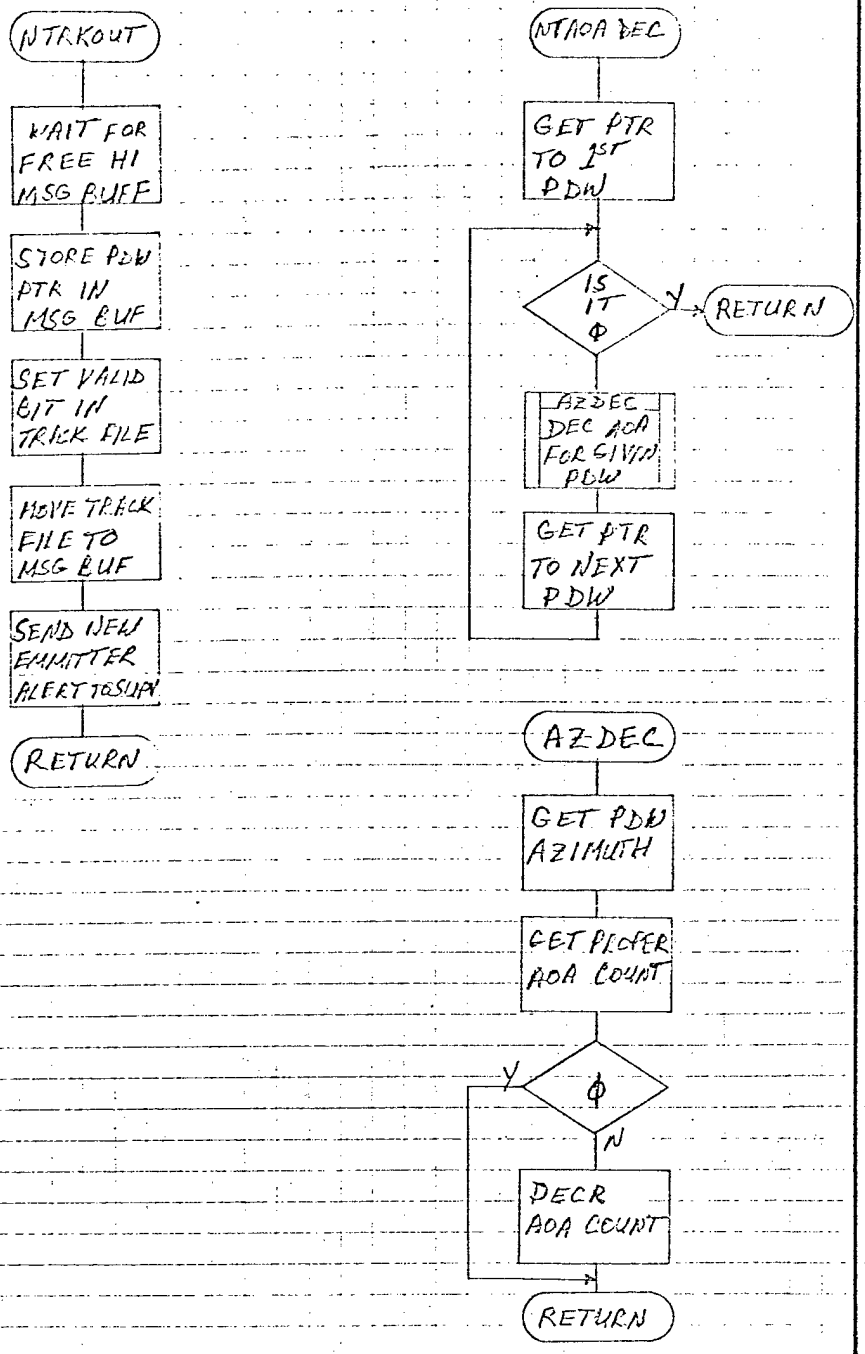

RAYTHEON | RAYTHEON COMPANY LEXINGTON, MASS. 02173

PROGRAM/ROUTINE SUBROUTINE ACRONYM: IEWS SORTER – NESU

CODE IDENT NO: 49956 | PREPARED BY | DATE

NUMBER: GEN TRK ROUTINES | SHEET 16 OF 19

28

FLOW CHART

REMARKS

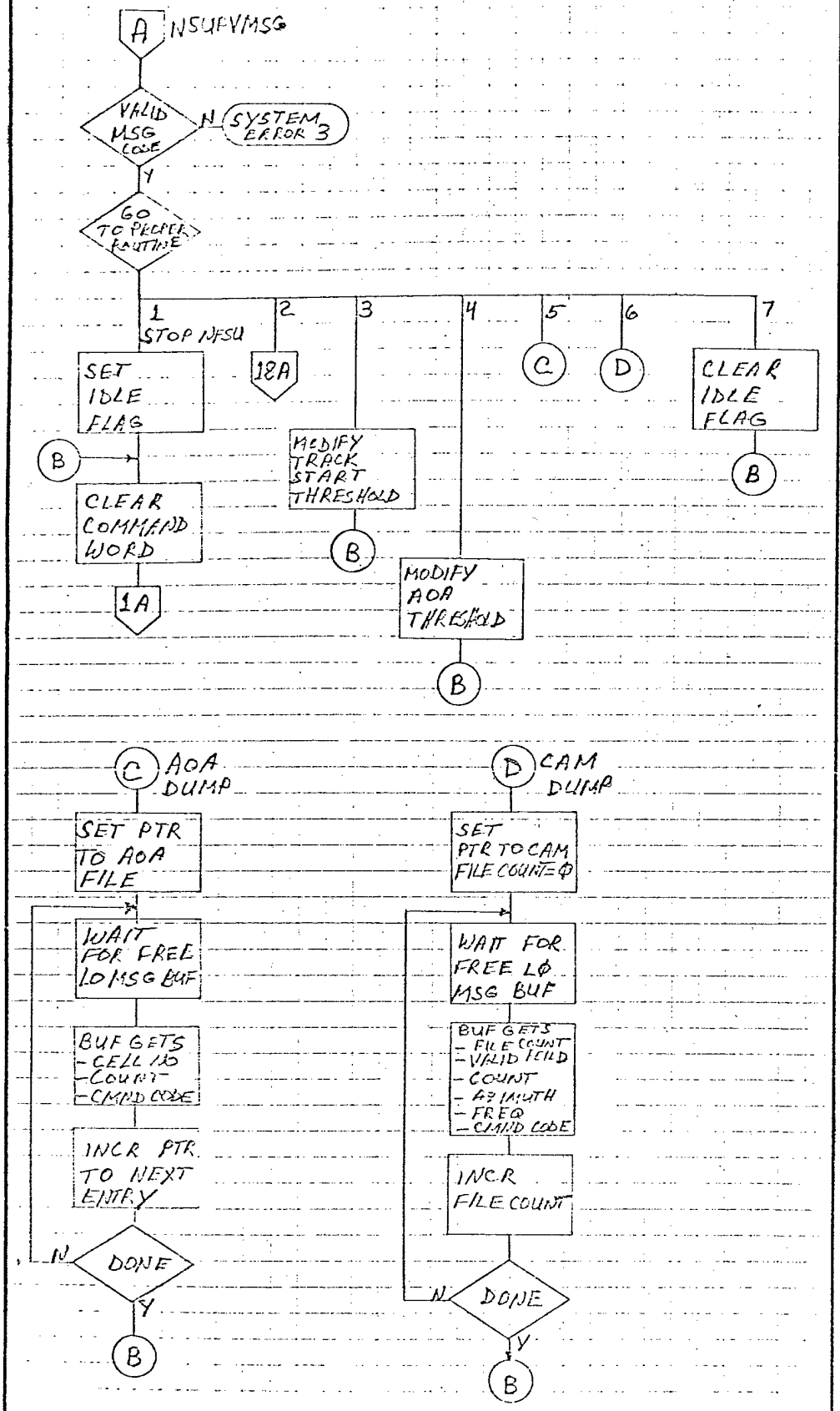

RAYTHEON COMPANY
LEXINGTON, MASS. 02173

PROGRAM/ROUTINE/SUBROUTINE ACRONYM
JEWS SORTER - NFSU

49956 PREPARED BY DATE

NUMBER SURV CMND PROCN SHEET 17 OF 19

FLOW CHART | REMARKS

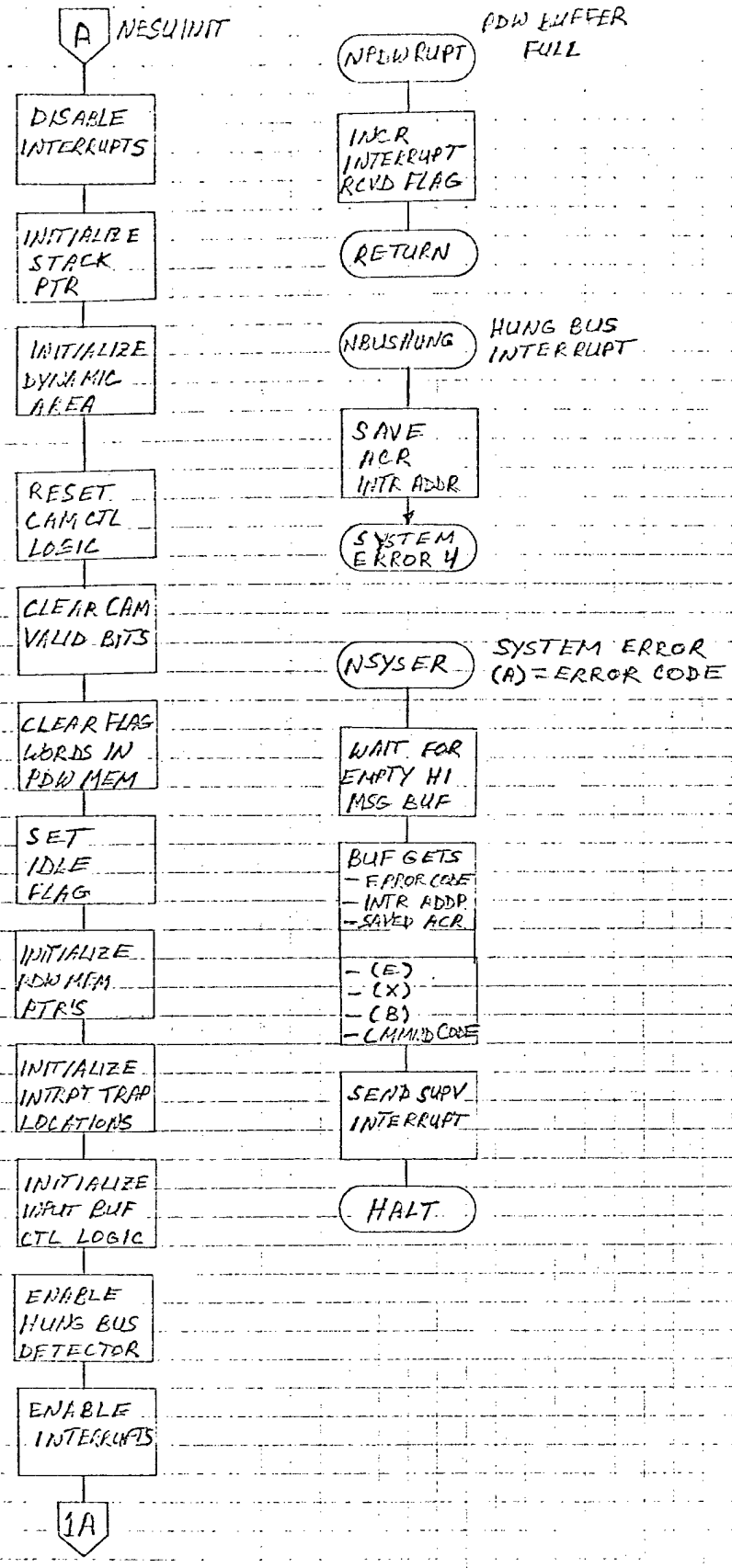

RAYTHEON | RAYTHEON COMPANY LEXINGTON, MASS. 02173

PROGRAM ROUTINE SUBROUTINE ACRONYM: IEWS SORTER-NESU

CODE IDENT NO: 49956 | PREPARED BY | DATE

NUMBER: INITIALIZER | SHEET 18 OF 19

FLOW CHART

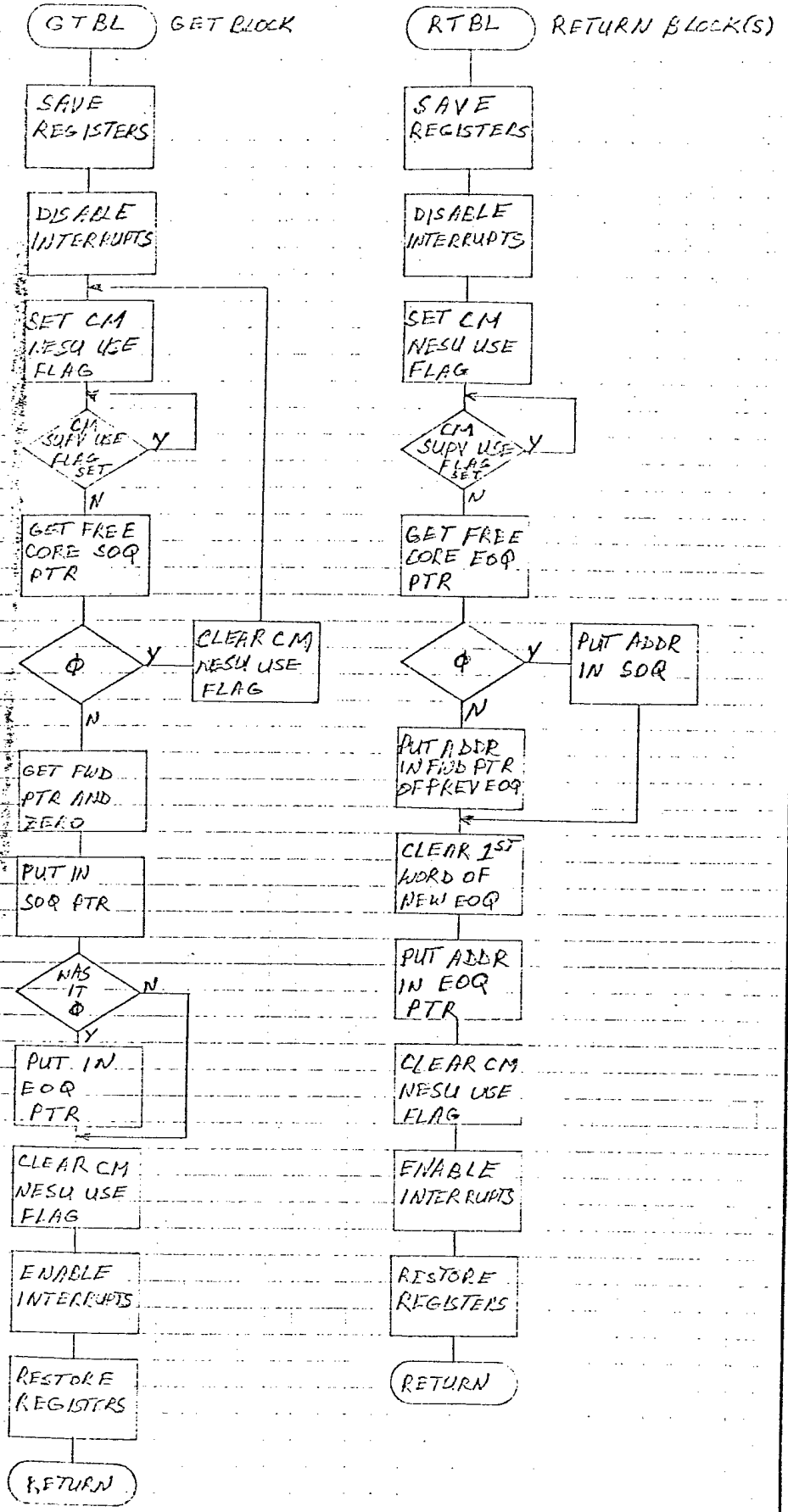

REMARKS

CM MEANS CORE MANAGER

RAYTHEON COMPANY
LEXINGTON, MASS. 02173

PROGRAM/ROUTINE/SUBROUTINE ACRONYM
IEMS SORTER - NESU

LOGIC DIAGRAM NO. 49956
PREPARED BY
DATE

NUMBER CORE MANAGER
SHEET 19 OF 19